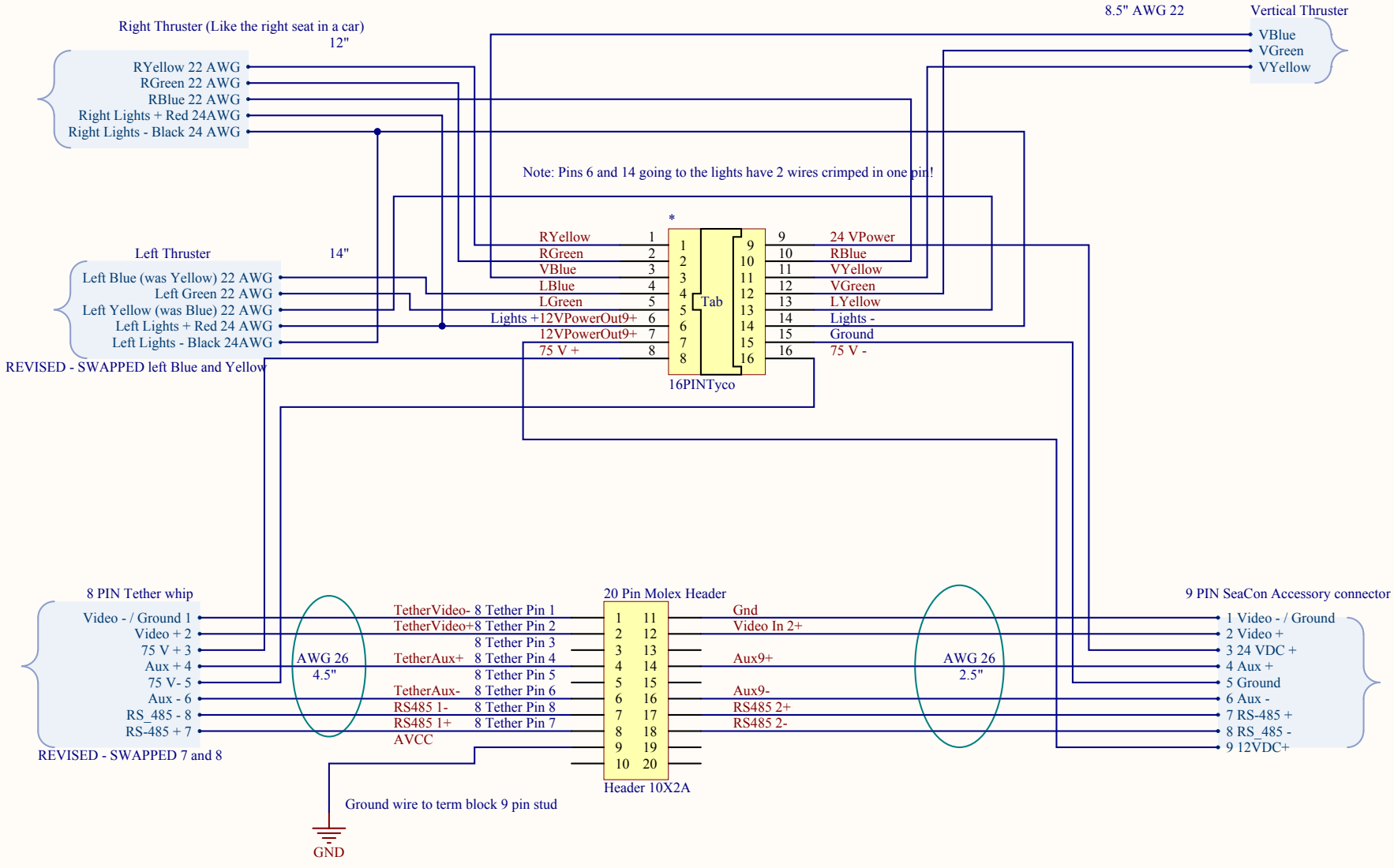

Title		
Size A	Number	Revision 4.0
Date: 9/28/2010		Sheet of
File: D:\Public\..\Pro4SubWireHarness15.SchDoc		Drawn By: